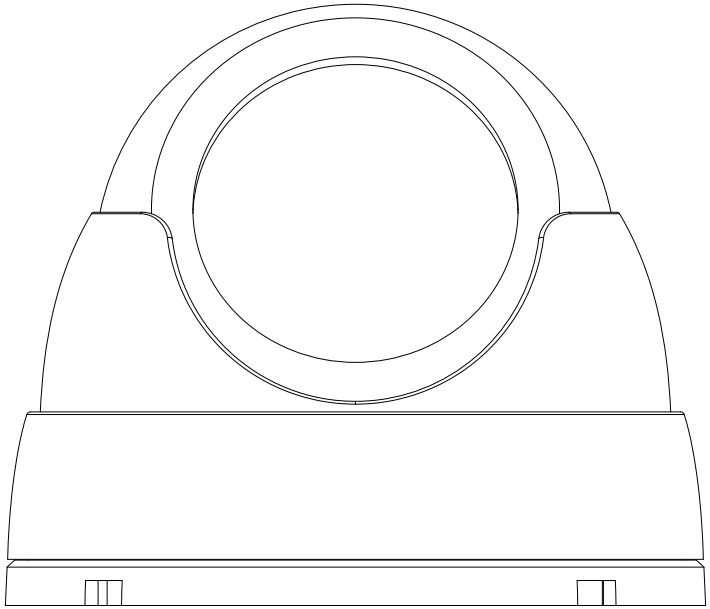

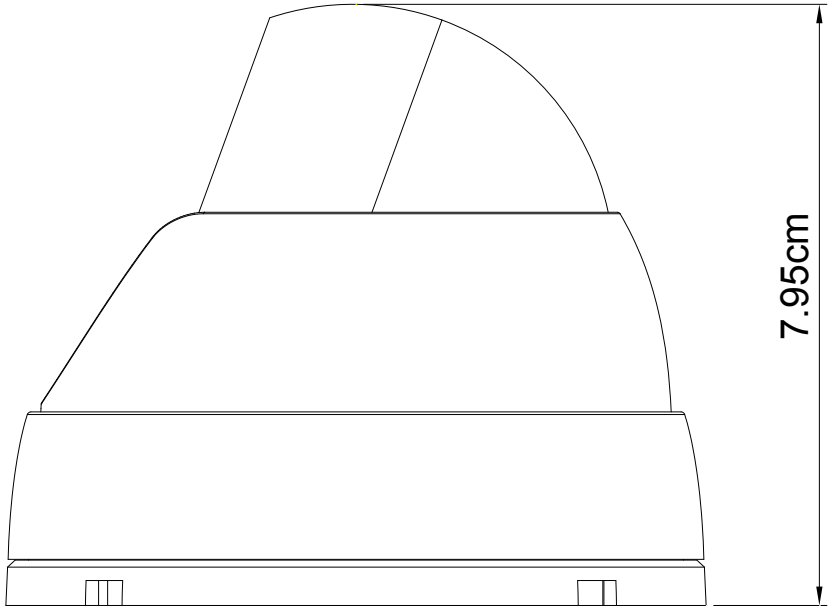
7.95cm

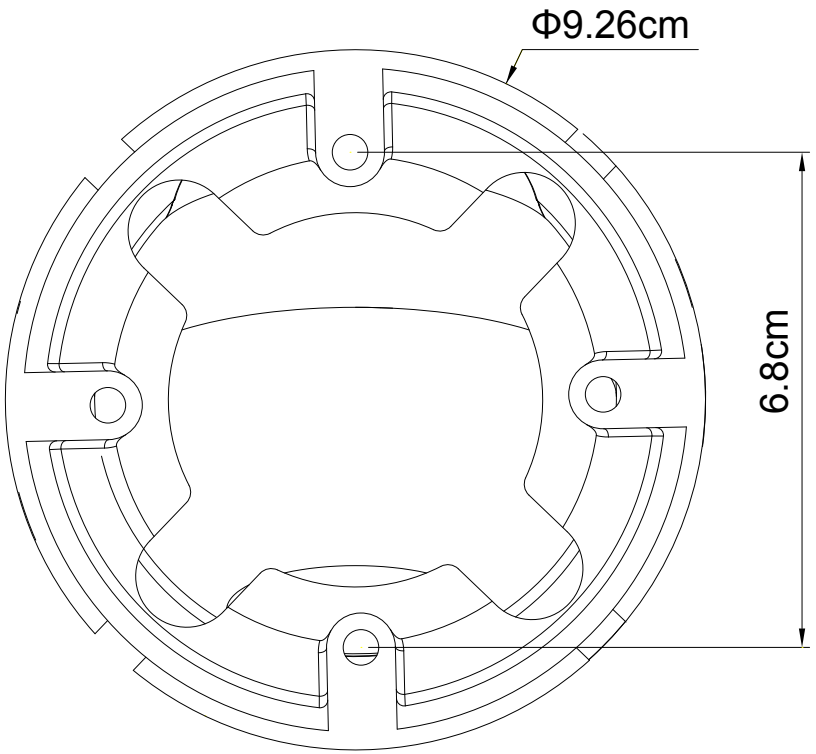
Φ9.26cm
6.8cm